开关外形尺寸:

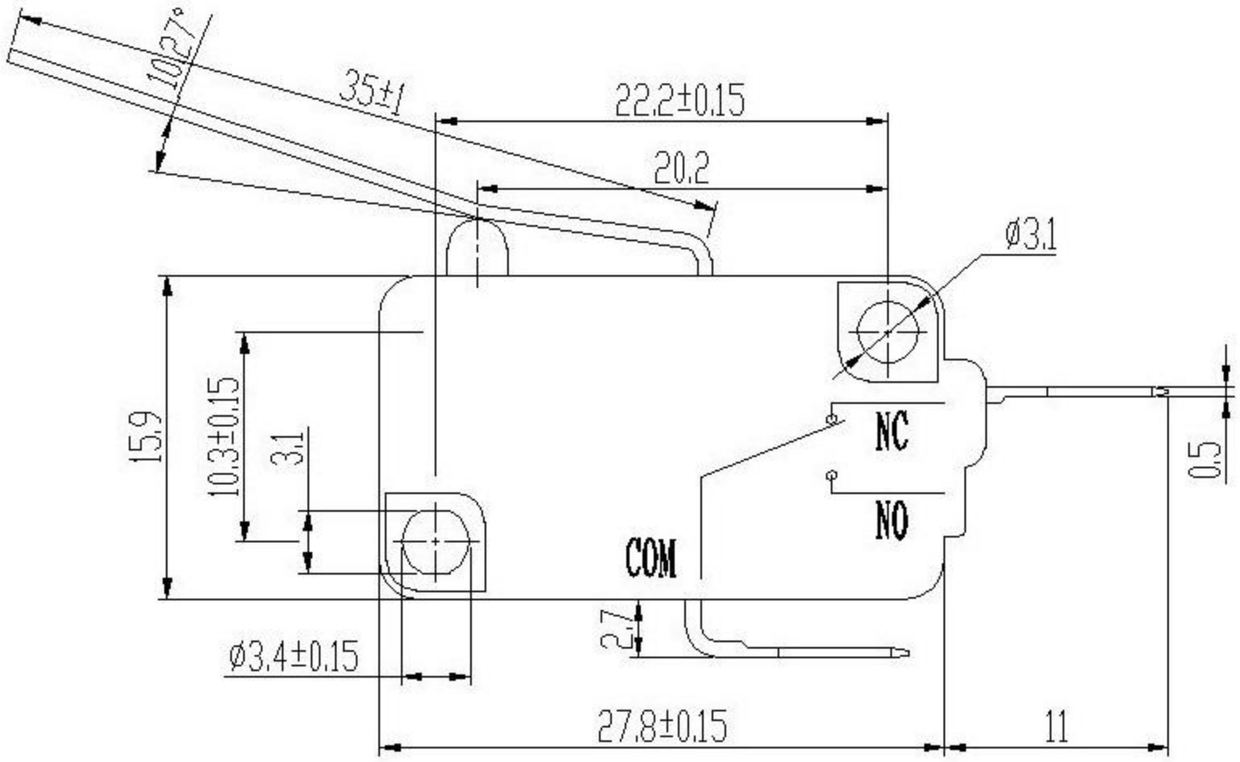

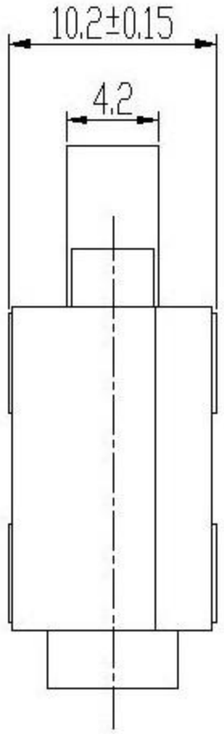

开关技术特性(Switch technical Characteristics):

项目 (ITEM)	技术参数 (technical parameter)		特性值 (Value)
1	电气额定值 (Electrical Rating)		5(2)A/10A/16(3)A/21(8)A 250VAC
2	接触电阻 (Contact Resistance)		≤30mΩ (初始值 Initial value)
3	绝缘电阻(Insulation Resistance)		≥100MΩ (500VDC)
4	耐压强度 (Dielectric Voltage)	同极不相接端子间 (between non-connected terminals)	1000V/0.5mA/60S
		端子与外壳或非载流金属零件之间(between terminals and the metal frame)	3000V/0.5mA/60S
5	电气寿命(Electrical Life)		≥50000 cycles
6	机械寿命(Mechanical Life)		≥1000000 cycles
7	工作温度 (Operating Temperature)		-25~125℃
8	操作频率 (Operating Frequency)		电气 (electrical) :15 cycles 机械 (Mechanical) :60 cycles
9	抗振动 (Vibration Proof)		振动频率 (Vibration Frequency): 10~55HZ; 振幅 (Amplitude): 1.5mm; 三向 (Three directions) :1H
10	可焊性(Solder Ability): 超过80%的浸锡面积被焊料所覆盖(More than 80% of immersed part shall be covered with solder)		焊接温度(Soldering Temperature): 235±5℃ 浸渍时间(Immersing Time): 2~3S
11	耐焊接热 (Solder Heat Resistance)		自动焊接 (Dip Soldering): 260±5℃ 5±1S 手工焊接 (Manual Soldering): 300±5℃ 2~3S
12	安全认证 (Safety Approvals)		UL、CSA、VDE、ENEC、TUV、CE、KC、CQC
13	测试条件 (Test Conditions)		环境温度 (Ambient Temperature): 20±5℃ 相对湿度 (Relative Humidity): 65±5%RH 大气压 (Air Pressure): 86~106KPa

注: "*"□表示关键尺寸(3个).

NO.	PARTS	MATERIALS	Q'TY	
8				
7				
6				
5	SPRING	SUS	1	NATURAL
4	CAM STICK	SUS	1	NATURAL
3	CASE	PA66/BRASS STRIP	1	GREY/Ag PLATED
2	COVER	PA66	1	BLACK
1	KNOB	PA66/PBS C5210R-EH	1	WHITE/Ag CLAD

TOLERANCE UNLESS SPECIFIED
WITHIN 1.5mm : ±0.1mm
OVER 1.5mm : ±0.2mm

ISSUE	DATE	DESCRIPTIONS OF REVISION	APPD.
A	2012-8-13	初 版	

TITLE : Miocro Switch
UNIT : mm
DRWG NO.:
MODEL:
SCALE: 5:1

DWN.		2012-8-13
CHK'D		2012-8-13
APPD.		

东莞市溪榜电子有限公司