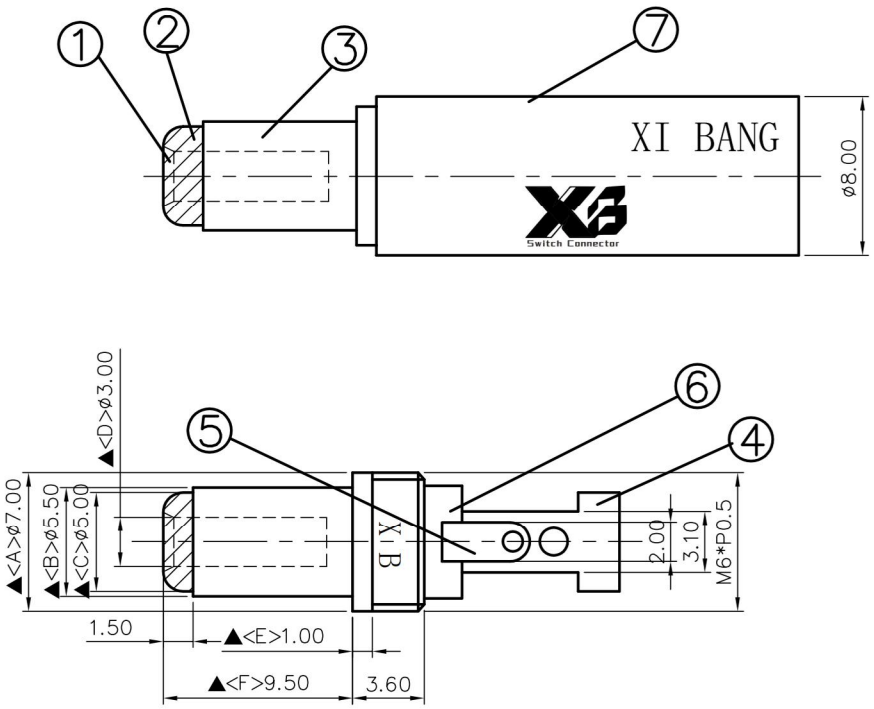

NO.	Description	Material	Q'TY	Finish
7.	Housing	POM	1	Black Color
6.	Insulator	POM	1	Blue Color
5.	Terminal	Brass	1	Nickel Plated
4.	Ground Terminal	Brass	1	Nickel Plated
3.	Outer Sleeve	Brass	1	Nickel Plated
2.	Insulator Ring	POM	1	Black Color
1.	Inner Barrel	Brass	1	Nickel Plated

东莞市溪榜电子有限公司
Switch Connector DONG GUAN XI BANG ELECTRONICS CO., LTD

DATE	DWN	CHKD	APVD	MANAGER
12.12.2007				

PART NAME:DC PLUG | PART NUMBER: XB-DC-T-701B0N00001G | VERSION:3.0

TOLERANCE:±0.3mm UNLESS OTHERWISE SPECIFIED | UNIT:mm | SCALE:1/1

RoHS Compliant | For Reference 僅供參考

SPECIFICATIONS:
Contact Resistance :30mΩ max
Insulation Resistance :100MΩ min.at DC500V
Dielectric Withstand Voltage:AC 500V for one minute
Remark:? :The Most Important Dimension