RoHS Compliant

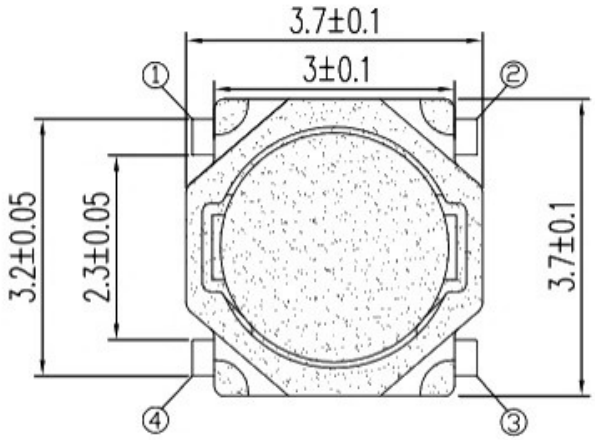

客选	高度	PCS/盘
	H=0.4mm	10000

客选	按力规格 A
	160^{+40}_{-20}gf
	260^{+40}_{-20}gf
	300^{+40}_{-20}gf

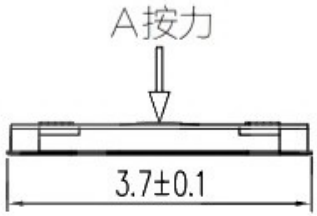

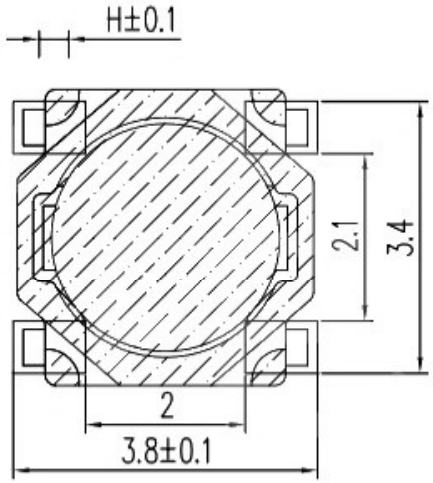

PCB板焊盘尺寸

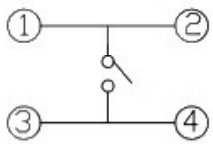

电路图

NO.	NAME	MATERIAL	FINISHING
1	TERMINAL	phosphorous bronze	Silver plating
2	CASE	LCP	White
3	CONTACT	SUS301	Silver plating
4	Waterproof membrane	PI	Yellow

SPECIFICATIONS	
Operating temperature rangs	-30° to +85°
Rating	DC 12V 50mA Max.
Lifetime	50000 Cycles min
Contact Resistance	100mΩ Max
Dielectric strength	250V AC for 1min.
Travel	0.15±0.1mm
Solder temperature	255±5°

DONG GUAN XI BANG ELECTRONIC CO., LTD

COPYRIGHT RESERVED,PLEASE DO NOT COPY.

PART NAME	SWITCH			DRAWING	Y,C,ZHANG	DWG.No.	SBICL
PART NO.				CHECK	G.C.Chen	REV.	A1
UNIT : mm	TOLERANCE OTHERWISE	UP TO 5 ±0.2; ABOVE 5 ~30 ±0.3; ABOVE 30 ±0.5; ANGLE ±3°	ANGLE 0°±3°	APPROVAL		DATE	
				SCALE	2:1	PAGE	1 OF 1