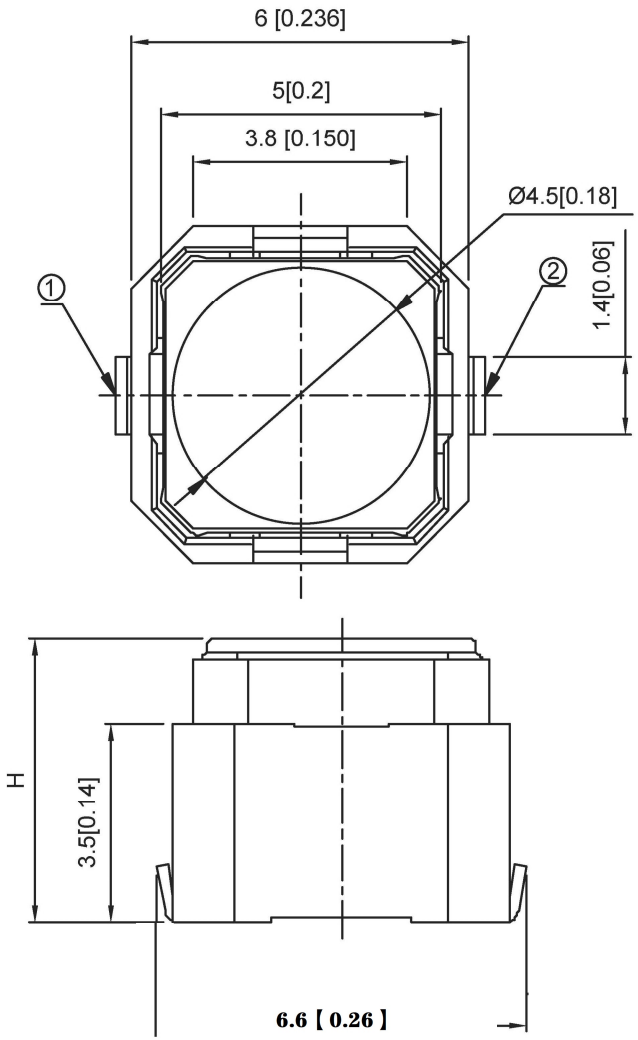

CIRCUIT DIAGRAM

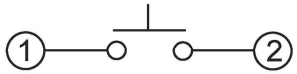

SMD REFLOW PATTERN

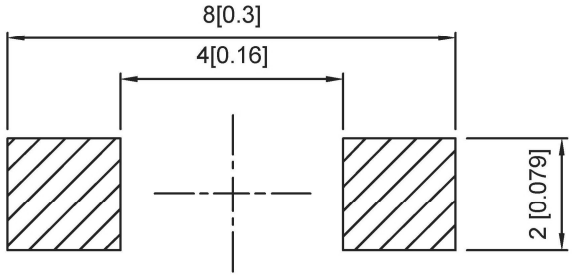

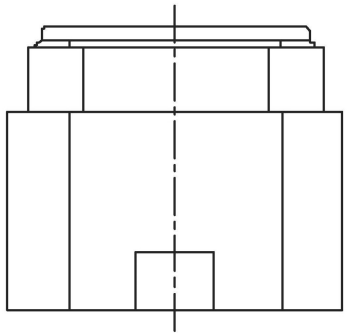

SPECIFICATION

Contact Rating:	50mA,12V DC
Contact Resistance:	100mΩ max
Insulation Resistance:	100mΩ min.500V DC
Dielectric Strength:	250V AC/1minute
Travel:	1.3mm
Operating Temp:	-30℃~+85℃
Storage Temp:	-30℃~+80℃

PAPT NO	TS-1199A-X-X
Operating Force	A:160gf B:200gf C:260gf
Height	H:A:4.3 B:5.0

ITEM	PAPT NAMF	TER,NO	QTY	MATERIAL	FINISHING	REMARK
⑤	Terminal	——	2	Brass（0.30t）	Plating silvering	——
④	Contact	——	1	F.ag/Sus	Natural	——
③	Base	——	1	Lcp		——
②	Cover	——	1	Lcp		——
①	Keystake	——	1	Lcp		——

MARK	DESCRIPTION	DATE	REVISED	APPROVED
Δx				
Δx				
Δx				

REVISIONS

units:	mm
tolerance:	
X.X	±0.2mm
X.XX	±0.1mm
X.XXX	±0.05mm

UNSPECIFIED TOLERANCES

www.alpsr.com www.gdxjdz.com www.xbswitch.com

DSND		DATE		SCALE: N/A	MODEL TYPE: TACT SWITCH
DWN		DATE		VIEW:	PART NO.:
CHKD		DATE		UNIT: mm/in	
APPD		DATE		SIZE: A4	DWG NO TS-1199A-X-X

DONG GUAN XI BANG ELECTRONIC CO., LTD

WEIGHT	SHEET	REVISION
1.0g	1/1	A0