受控文件

http://www.alpsr.com

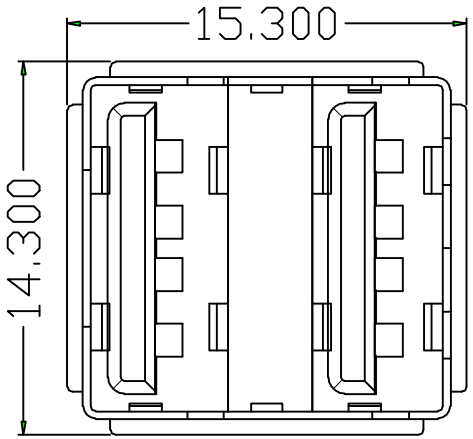

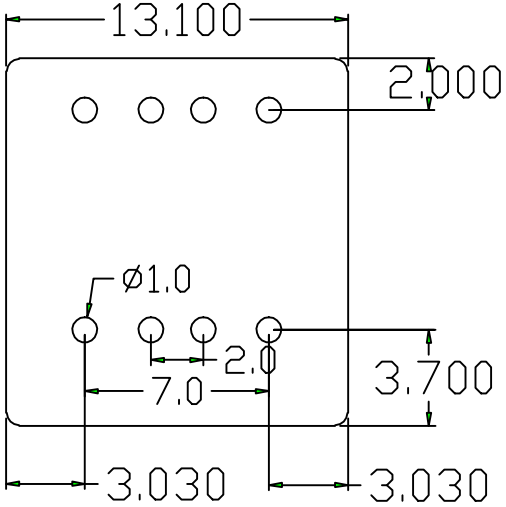

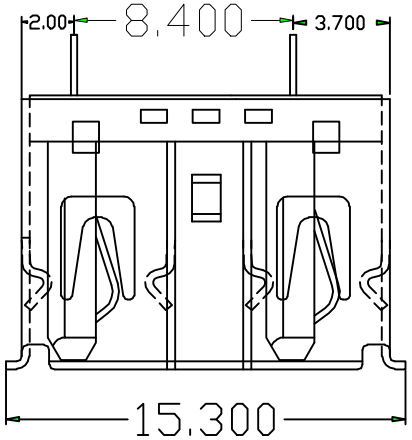

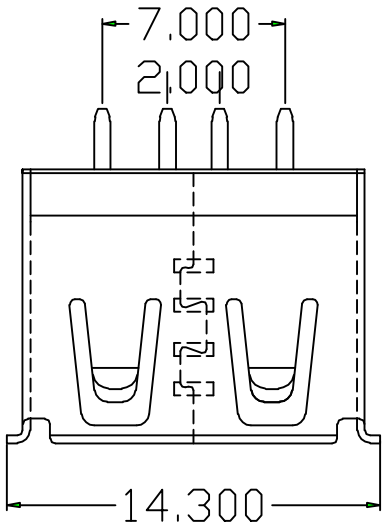

NOTES:
Housing: Thermoplastics,UL94V-0
Contact: Copper Alloy
Shell: Copper Alloy/Steel
Voltage Current Rating: 1.5 AMP. 30V AC
Insulation Resistance: 1000MΩ Min.
Contact Resistance: 30 MΩ Max.
Dielectric Withstanding Voltage: 500W AC
Temperature Range: -35℃ to +85℃
Insulator color: Black/White
Plastic material: PBT/LCP/Others
Shell finish: Nickel plated/Tin-Lead plated
Mechanical:
Mating Force: 3.5KG MAX
Unmating Force: 1.02 KG MIN.
Contact finish:
01: Selective Gold Flash
02: Selective Gold 3U"
03: Selective Gold 5U"
04: Selective Gold 15U"
05: Selective Gold 30U"

东莞市溪榜电子有限公司
DONG GUAN XIBANG ELECTRONICS CO., LTD.

TOLERANCE: X.X ±0.30, X.XX ±0.20, X.XXX ±0.10, X.° ±10°, .X° ±8°, .X° ±5°	DRAWED BY :	DATE : 2015.08.18	PART NAME: 双层直插10.5卷边无脚
	CHECKED BY:	DATE : 2015.08.18	PART NO. SEE TABLE
UNIT: mm [inch]	APPROVED BY:	DATE :	MOLD NO.
			DRAW NO: 2015.08.18
SCALE:1:1 SIZE: A4			SHEET NO. 1 OF 1