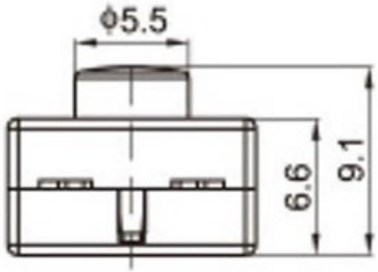

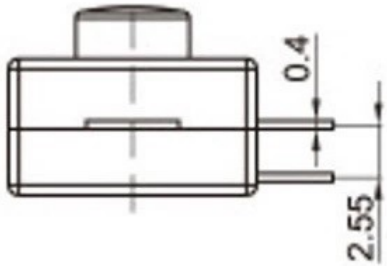

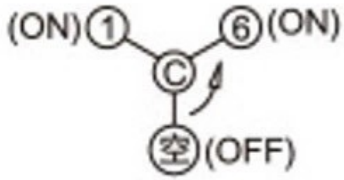

ON-ON-OFF

SCHEMATIC (NON-SHORTING)

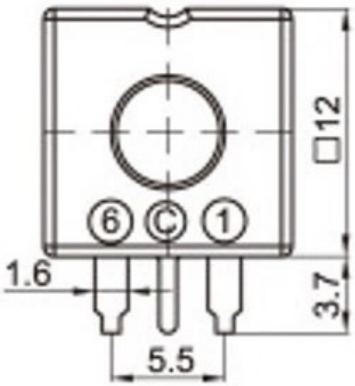

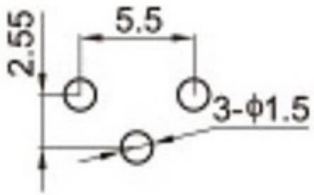

印制线路板
P.C.B

注："*"□表示关键尺寸(3个).

NO.	PARTS	MATERIALS	Q'TY	
8				
7				
6				
5	SPRING	SUS	1	NATURAL
4	CAM STICK	SUS	1	NATURAL
3	CASE	PA66/BRASS STRIP	1	GREY/Ag PLATED
2	COVER	PA66	1	BLACK
1	KNOB	PA66/PBS C5210R-EH	1	WHITE/Ag CLAD

TOLERANCE UNLESS SPECIFIED			
WITHIN 1.5mm : ±0.1mm	A	2012-8-13	初 版
OVER 1.5mm : ±0.2mm	ISSUE	DATE	DESCRIPTIONS OF REVISION / APPD.
TITLE : VERTICAL PUSH SWITCH	UNIT : mm	DRWG NO.:	
MODEL:	SCALE: 5:1	DWN.	2012-8-13
东莞市溪榜电子有限公司		CHK'D / APPD.	2012-8-13