ROHS

REVISIONS					
REV.	ECN NO.	LOCATION	DESCRIPTION	DATE	DESIGN
X1	NA		INITIAL RELEASE	2017.09.25	WIND

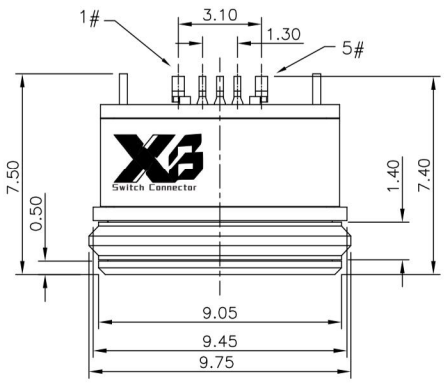

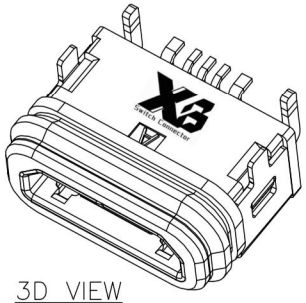

3D VIEW

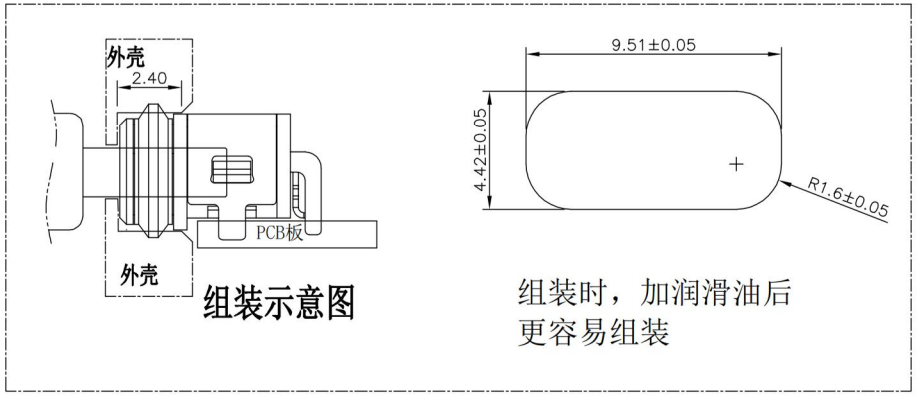

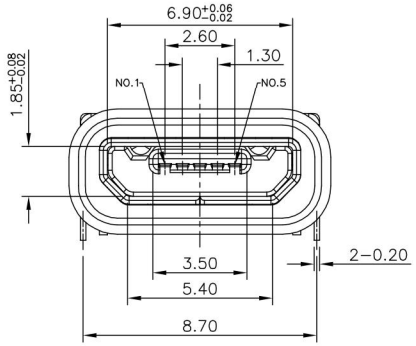

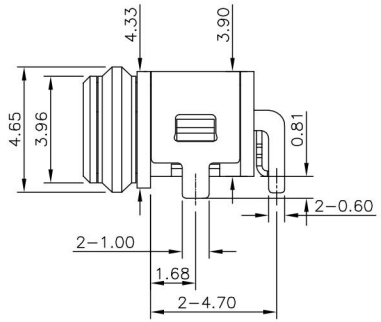

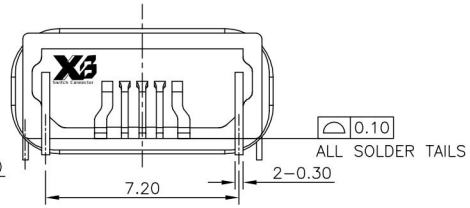

NO.	DESCRIPTION	QTY	MATERIAL	REMARK
⑦	Oval ring	1	Rubber	Black
⑥	Glue	1	-----	Black
⑤	U-shaped frame	1	Copper alloy or stainless	Nickel plated
④	Inner shell	1	Copper alloy or stainless	Nickel plated
③	Terminal	5	Copper alloy, 0.15t	Gold Plated On Contact Area.
②	Outer shell	1	High temperature thermoplastic	Black
①	Body	1	High temperature thermoplastic	Black

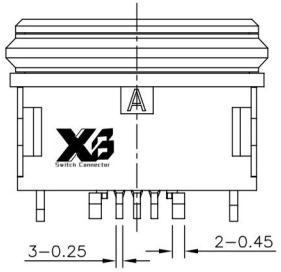

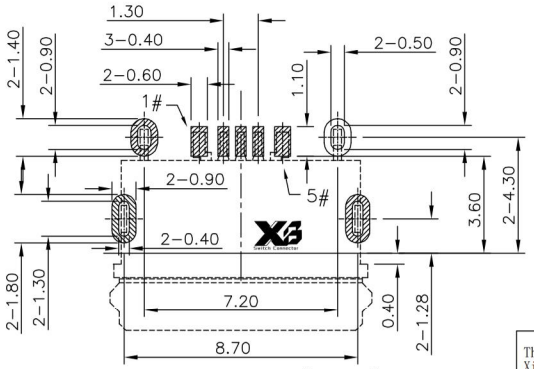

RECOMMENDED P.C.B. LAYOUT (TOP VIEW)
GENERAL TOLERANCE: ±0.05

SPECIFICATIONS:
1. ELECTRICAL CHARACTERISTICS:
   1.1. RATING: 3A(PIN1&5),0.5A(PIN2&3&4);
   1.2. CONTACT RESISTANCE: 30 mΩ MAX.(INITIAL);
   1.3. DIELECTRIC WITHSTANDING: 500V AC MIN.;
   1.4. INSULATION RESISTANCE: 1000MΩ MIN.;
2. DURABILITY: 10,000 CYCLES MIN.;
3. INSERTION FORCE: 3.5Kgf (35N) Max.;
4. EXTRACTION FORCE: 0.8Kgf (8N) Min;
5. WATER PROOFNESS:THIS PRODUCT IS BASED ON IPX8(1.5m,30min)
6. PLUG INTERFACE DIMENSIONS COMFORM TO USB2.0 SPEC.
7. PACKAGING: TAPE & REEL.

Contact Number	Signal Name	Remarks
1#	VBUS	Power
2#	D-	Date-
3#	D+	Date+
4#	ID	Reserve or Gound
5#	GND	Gound

This document is the property of Xi Bang Electronic Technology Co.,Ltd.

东莞市溪榜电子有限公司
DONG GUAN XI BANG ELECTRONICS CO.,LTD

Unless otherwise specified, Tolerance:

X.	±0.30
X.x	±0.20
X.xx	±0.15
X.xxx	±0.10
Angles	±3°

DESIGN	GAO PENG	DATE	2017.09.20
CHECKED	HE. LONG. FEI	DATE	
APPROVED	PANG. DONG	DATE	
PART NO.	XB-USB-M-5P-1188-IPX7		
DRAWING NO.			

TITLE: MICRO USB 2.0 B TYPE RECEPTACLE CUSTOMER DRAWING

REV.: X1	SCALE: 6:1	UNIT: mm	
SIZE: A4	SHEET: 1/1		